HELI

MANUAL PALLET JACK

1.5 T - 2.5 T

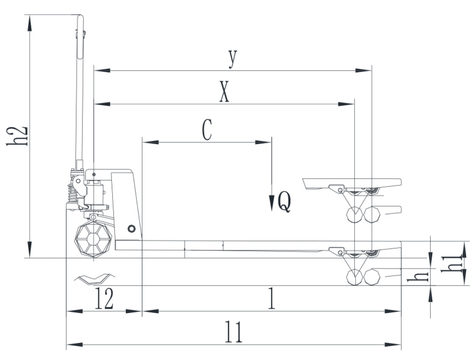

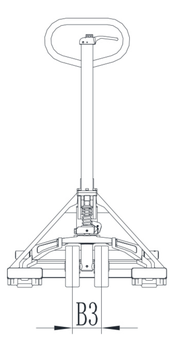

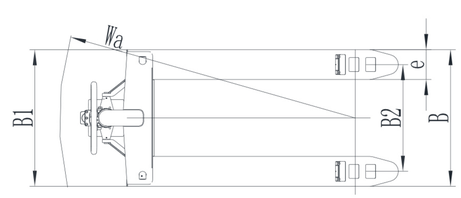

CBY(NA)/25	2 Way manual pallet truck technical parameters（Okukun Pump，Hopper Pump）					
				CBY15	CBY25	
1	load capacity		Q	1500	2500	kg
2	Fork overall width		B	520/685	520/685	mm
3	Fork length		L	1070/1220	1070/1220	mm
4	Fork width		e	150	150	mm
5	lifting height(Min)		h	85	85	mm
6	lifting height(Max)		h1	160	160	mm
7	Tyre size (steering wheel)			ϕ180×65	ϕ180×65	mm
8	Tyre size (Bearing wheel)	Single Wheel		ϕ65×100	ϕ65×100	mm
9	Tyre size (Bearing wheel)	Double Wheel		ϕ65×70	ϕ65×70	mm
10	Weight			75	68	kg

Not Compatible with Chep Pallets side entry

Okukun Pump

Hopper Pump

Product Characteristics

- The body is small, the weight is light, it can work in narrow passages and can enter the elevator with full load;
- The control part is installed on the upper part of the handle, which is easy to operate and the control mechanism is flexible, reliable and safe.
- With overload automatic unloading device, and full-load descending speed limit device to effectively protect the deformation of the main components;
- Molded production, moderate price, stable quality;
- The use of high-strength polyurethane wheels is stable, flexible, light, and free of magnetic fields and sparks;
- The latest design and manufacture, overload protection device, descending speed limit device, high-strength manganese steel plate;
- Hopper Pump : The classic Japanese-style welded pump with forged valve body can effectively reduce the quality problems caused by various casting defects. The spool adopts the column-mounted type to make the pump volumetric efficiency higher and easier to maintain;
- Okukun Pump:Integral casting pump, the valve core adopts the arrangement type to make the volumetric efficiency of the pump higher, and the maintenance is more convenient. The cylinder head and the pump body are assembled, which is convenient to clean the casting waste and processing waste inside the cylinder;
- BF Pump: Integral casting pump, beautiful appearance, stable quality, convenient maintenance;